used for: D-SUB

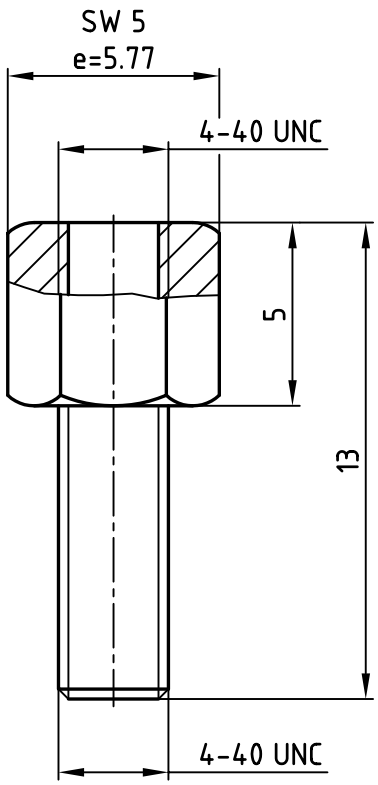

SCREW

WASHER Ø6/3x0.8

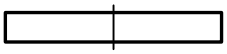

SPRING RING DIN127 A3

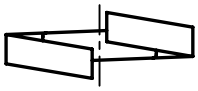

NUT 4-40 UNC
SW 5x2.2

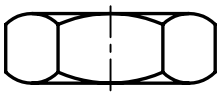

Directive 2002/95/EC „RoHS" Compliant

1 SET CONSISTS OF:
2 SCREWS
2 WASHERS
2 SPRING RINGS
2 NUTS

THIS DRAWING MAY NOT BE COPIED OR REPRODUCED IN ANY WAY, AND MAY NOT BE PASSED ON TO A THIRD PARTY WITHOUT WRITTEN PERMISSION. OWNERSHIP AND COPYRIGHT OF CONEC GmbH

DO NOT ALTER CAD DRAWING BY HAND

rev.	description	date	name

tolerance

2001	date	name
drawn	22.03.	Parei
appd.	22.03.	E. Mickenbecker
norm		
d-old		

CONEC®

scale: 5:1

material: COPPER ALLOY NICKEL PLATED

title: SCREW LOCKING
Type 1 / 4-40 UNC / 13mm

dwg no: 16K1A166A

AutoCAD 2000

DIN-A 4

sh: 1/1

part no: 160X10359X